597-133-E
2016-03-04
104S

FURLEX
SELDÉN

Manual and Spare parts list
Furlex *104S*

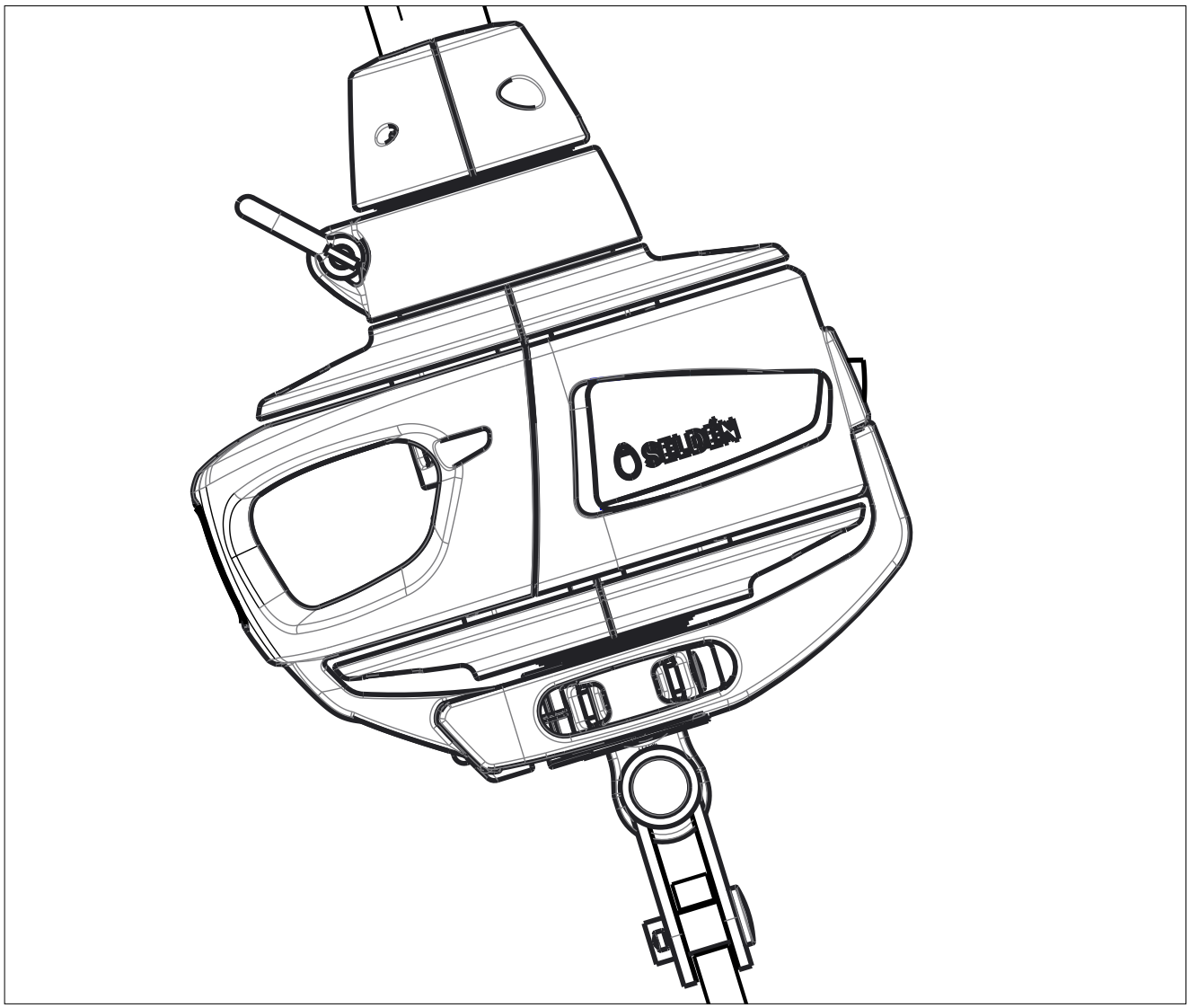

SELDÉN

Contents

		Page
1 Introduction		**3**
1.2	*What's included?*	*4*
1.3	*Main dimensions*	*4*
1.4	*Safety precautions*	*5*
1.5	*Sail information*	*6*
2 Assembly preparations		**7**
2.2	*Mast and deck attachment*	*7*
2.3	*Wire length calculation*	*8*
2.4	*Top extrusions - length calculation*	*9*
3 Assembly		**11**
3.1	*Luff assembly*	*11*
3.2	*Fitting Sta-lok eye terminal*	*13*
3.3	*Fitting eye terminal to swaged stud (Stud/Eye)*	*15*
4 Installation		**17**
4.1	*Mast attachment*	*17*
4.2	*Deck attachment*	*18*
4.3	*Installation on a stepped mast*	*19*
4.4	*Installation on an un-stepped mast*	*19*
4.5	*Furling line installation*	*19*
4.6	*Adjusting the forestay length*	*21*
4.7	*Checklist*	*22*
5 Operation		**23**
5.1	*Hoisting*	*23*
5.2	*Unfurling the sail*	*24*
5.3	*Furling the sail*	*24*
5.4	*Reefing*	*25*
5.5	*Racing*	*25*
6 Maintenance		**26**
6.1	*Inspection*	*26*
6.2	*Service*	*26*
6.3	*Storage*	*26*
6.4	*Dismantling*	*27*
6.5	*Troubleshooting*	*31*
6.6	*Spares & Accessories*	*33*
6.7	*Toggles & links*	*37*
7 Warranty		**38**

1 Introduction

Congratulations on the purchase of your new Furlex jib furling system. Furlex jib furlers have been engineered and manufactured by Seldén Mast since 1983. The system has been continuously developed over the years and we are now launching the fourth generation Furlex, the most sophisticated single line jib furling system so far.

1.1 Key features

Maximized luff length

The luff extrusion foil shape remains unchanged all the way down the furling unit. This allows the whole sail to be furled in an even roll - right down to the tack of the sail. This is essential to acheive an efficient sail shape when the sail is reefed.

Load distributors

The patented load distribution technology of the Furlex system distributes loads over the entire ball race. This reduces friction, provides smoother furling and considerably reduces bearing wear.

Compact halyard swivel

The all new halyard swivel design uses an HMPE textile loop that allows the halyard load to act in the centre of the swivel instead of pulling on an offset eye. This reduces bearing loads and minimizes any wobbling tendencies.

Low torque tack ring

The tack ring ”free turn” allows for the luff to be furled one turn before the tack. This makes for a flatter and more efficient sail shape when the sail is reefed. Reduced tack ring diameter in combination with a low profile shackle – or an optional soft shackle – reduces the amount of effort needed to furl in that first turn compared to earlier models.

Soft shackle ready

The tack ring is prepared for using a textile loop instead of a stainless steel shackle. All surfaces are smooth and nicely rounded.

Aero grooves

Similar to the dimples on a golf ball, the Furlex AERO groove system reduces drag and creates better aero dynamic flow around the luff extrusion.

Third bearing

By the addition of a third roller bearing between the main ball bearings of the drum unit, the load from the furling line is distributed over a large bearing area, reducing furling friction even further compared to earlier models.

Floating connectors

The 316 stainless steel connectors are subjected to vertical loads only and no torsional loads.
Torsional loads are now taken by the join pieces alone which leaves the connectors “floating” inside the join thus reducing wear inside the joins.

Air gaps

Every join in the system is made with a nominal gap which means the extrusion ends will never get in contact with each other. This way there will be minimum chafe and no aluminum deposits staining on your new sail.

Mobile swivels

Both the halyard swivel and the drum unit can be easily removed from the foil for off-season storage.
This facilitates storing the foil with the mast and makes handling easier.

1.2 What's included?

Basic pack / Extended pack

The Furlex system consists of a basic pack with drum unit, halyard swivel, sail feeder, bearing halves, top guard and furling rope. The Extended pack also includes halyard leads, stanchion blocks and pre-feeder pack - accessories that will make your system work even better on your boat.

Foil pack, wire pack and eye pack

The Furlex system also includes a foil pack with luff extrusions, distance tubes and connectors. A complete forestay is also supplied with every Furlex, including a swaged stud/eye solution (no adjuster) or a Sta-Lok eye terminal fitting which may come with or without rigging screw. On new boats delivered with a complete new Seldén rig, the forestay is usually included in the standing rigging and does not come as a separate wire pack.

Basic pack / Extended pack		Foil pack	Wire pack / Eye pack
• Drum unit • Halyard swivel • Furling rope • Bearing halves • Top guard • Sail feeder • Manual	Extended pack also includes: • Halyard leads • Stanchion blocks • Pre-feeder pack • Torx bit set	• Luff extrusions • Distance tubes • Joining sleeves • Connecting plates	• Wire with swaged eye • Eye terminal (with or without rigging screw)

1.3 Main dimensions

All dimensions are given in millimeters and inches.

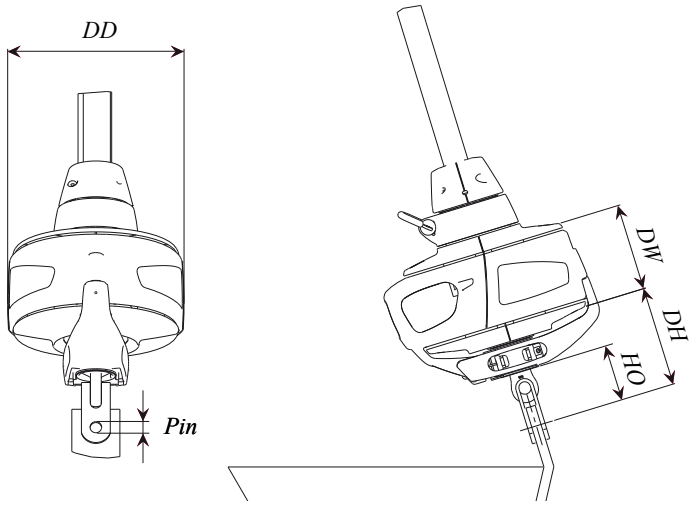

Fig. 1.3.a

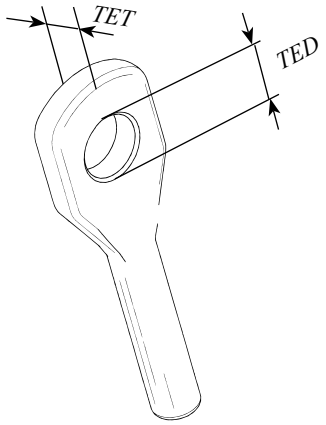

Fig. 1.3.b

Wire dim.	DD	DH	DW	HO	Pin	TED	TET
Ø4 (5/32")	Ø155 (6 7/64")	85 (3 11/32")	65 (2 9/16")	40 (1 37/64")	Ø8 (5/16")	Ø8.5 (21/64")	4.5 (11/64")
Ø5 (13/64")	Ø155 (6 7/64")	90 (3 35/64")	65 (2 9/16")	45 (1 49/64")	Ø10 (25/64")	Ø10.5 (13/32")	5.3 (13/64")
Ø6 (15/64")	Ø155 (6 7/64")	100 (3 15/16")	65 (2 9/16")	55 (2 11/64")	Ø10 (25/64")	Ø12.5 (31/64")	7.0 (9/32")

1.4 Safety precautions

The information in this manual must be followed carefully to avoid damage to the system and to aviod the risk of personal injury. The warranty is only valid if the system is assembled and operated according to this manual.

Please read the entire manual before assembly!

- Be very careful when you open the wire coil! It may spring open and cause damage and/or personal injury.
- Never use a snap shackle to secure the standing rigging, not even temporarily. When installing the system on a rigged boat, always use a strong screw pin shackle or tie the spinnaker halyard to a strong point on the boat before removing the existing forestay.
- Incorrect halyard routing can result in ”halyard wrap” which may cause severe damage to the forestay, and put the entire rig at risk. The angle between the halyard and the forestay must never be less than 15°. Incorrect halyard routing can also cause the halyard shackle to wear against the luff extrusion.
- If using a winch for the furling line, first check that there is no obstruction which may interrupt the furling operation and possibly cause damage.
- Take care to ensure that all split pins are secured properly after installation.

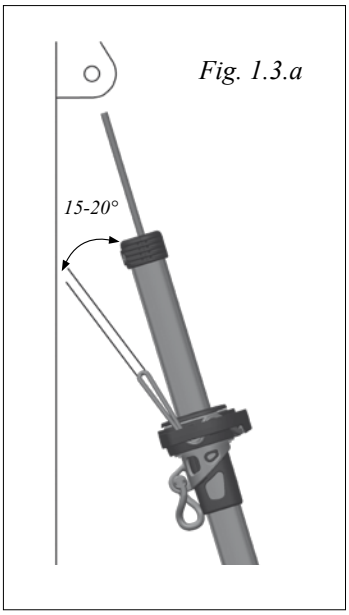

Fig. 1.3.a

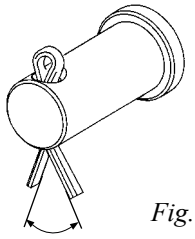
Fig. 1.3.d

Incorrect halyard routing can result in ”halyard wrap” which may cause severe damage to the forestay, and put the entire rig at risk. The angle between the halyard and the forestay must never be less than 15°!

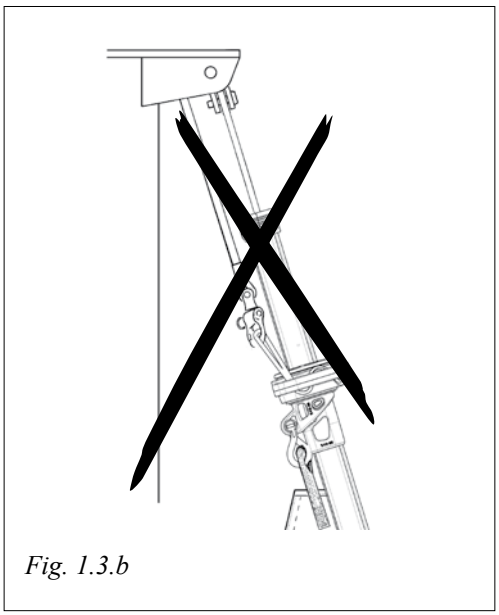
Fig. 1.3.b

May lead to

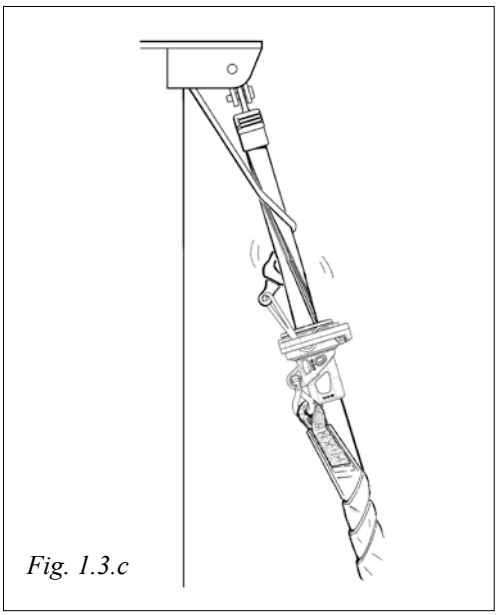
Fig. 1.3.c

1.5 Sail information

Your sailmaker has all the necessary sailmaker information through the Seldén Sailmakers guide.
The Sailmakers guide can be downloaded from www.seldenmast.com.

Note that if you want to use an existing sail, it will need some modifications.

- The luff length needs to be adjusted.
- A luff tape is required. The luff tape must be compatible with the Furlex luff extrusion geometry.
- Use webbing loops at the sail head and tack instead of grommets (cringles). The sail will then form tightly round the luff extrusion when furling, and achieve a better shape when reefed.

It is most important that the halyard swivel is located so that the halyard satisfies the 15–20° angle requirement. If the sail prevents the swivel from reaching the correct position, the luff length needs to be adjusted.

IF THE SAIL IS TOO LONG: Shorten the sail, e.g. in conjunction with changing to a luff tape compatible with Furlex.

IF THE SAIL IS TOO SHORT: Lengthen the sail by means of a HMPE or wire pendant fitted to the head of the sail. Attach the pendant directly to the sail to prevent unintentional removal, loss or exchange.

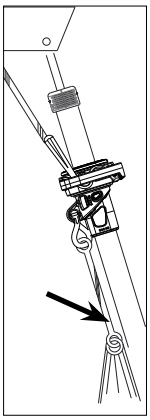

Fig. 1.5.a

Furlex type	Ø4 & 5	Ø6
Head deduction F	440 (17 21/64”)	440 (17 21/64”)
Tack deduction E (Any additional toggle or link must be added to E)	205 (8 5/64”)	220 (8 21/32”)
Cutback CB	60 (2 23/64”)	60 (2 23/64”)
Internal diameter of luff groove DLG	Ø6 (15/64”)	Ø6 (15/64”)
Width of luff groove WLG	2.75 (7/64”)	2.75 (7/64”)
Overall luff extrusion dimensions	30x20 (1 3/16” x 25/32”)	30x20 (1 3/16” x 25/32”)

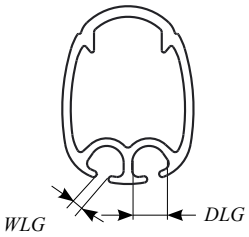

Fig. 1.5.b

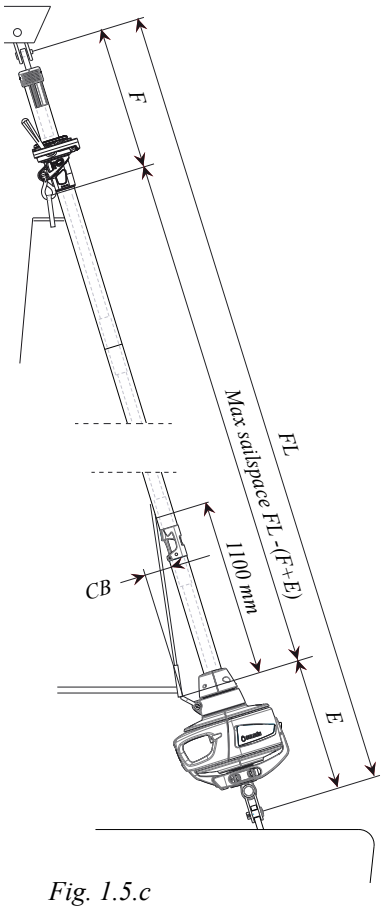

Fig. 1.5.c

2 Assembly preparations

2.1. Tools

Before starting with the assembly, make sure you have the following tools available:

- Socket screw driver
- Hack saw
- Torx bits
- Measuring tape
- Knife
- Hammer
- Pencil

If Sta-lok is to be fitted you will also need:

- Two adjustable spanners
- Polygrip
- Tape
- File
- Locking adhesive (included in the eye fitting pack)

2.2 Mast and deck attachment

Always make sure that the forestay can articulate in all directions, both in the top and at deck level. Toggles must be used in most cases to ensure sufficient articulation.

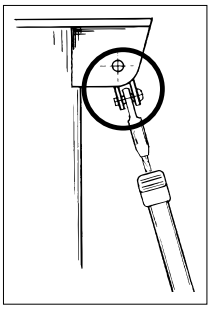

Fig. 2.2.a

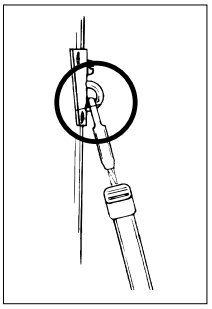

Fig. 2.2.b

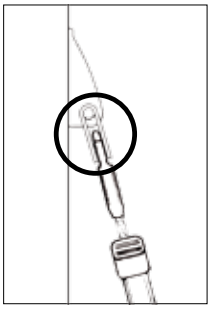

Fig. 2.2.c

The toggle on the furling unit should always be fitted directly to the chain plate. If the unit is to be fitted below deck or if it needs to be raised, an extension toggle can be used **but always make sure that the toggle that comes with the drum unit is attached to the chain plate.**

For available toggles and extension links, see “Spares and accessories”.

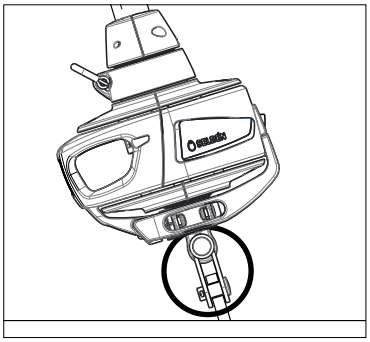

Fig. 2.2.d

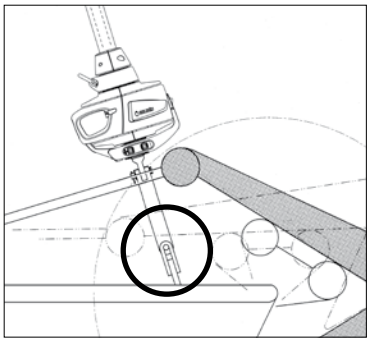

Fig. 2.2.e

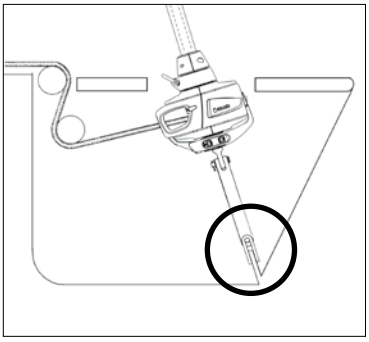

Fig. 2.2.f

2.3 Wire length calculation

If a Sta-lok terminal (with or without rigging screw) is included, the wire is supplied over-length. The wire has a swaged eye terminal on one end while the other end is open (= without terminal). If your Furlex is supplied with a fixed-length forestay, with a swaged eye on one end and a swaged stud in the other end, skip this part and go directly to 2.4.

If a stud-terminated stay is to be manufactured by a local rigger it is important to note that WL in this case equals the length of the finished stay, from eye to end of stud, as shown in fig. 2.4.a. WL is calculated in table 1.

Before assembly, an over-length wire (for Sta-lok) must be marked and finally cut to the correct length to fit the boat's actual forestay length. To find out the correct measurement, follow the steps below. If the mast is not stepped, you can jump directly to step 4.

1. Slacken the backstay and/or the cap shrouds as much as possible, but make sure that no rigging screws are unscrewed so far that the threads are no longer visible "on the inside" of the rigging screw body. The forestay setting should not be adjusted. Ideally the forestay setting should not be adjusted. However, if there is insufficient adjustment in the backstay, and the forestay has a rigging screw, this can be adjusted as well. Just make sure to mark the thread with tape before adjusting.
2. Pull the top of the mast forward using the genoa or spinnaker halyard. Secure the halyard using a "D" shackle or tie the halyard to a strong deck fitting. For safety reasons, do not use any halyard snap shackles. Secure the halyard tail after the halyard has been tensioned.
3. Go up the mast. Connect a free halyard to the forestay. Then detach the forestay and lower it using the free halyard. Bring the stay down and place it on a flat surface. If the forestay rigging screw was slackened, adjust it back to the tape mark.
4. Measure the forestay length (FL) with just enough tension to keep the forestay straight on the ground. Forestay length (FL) is the distance between the hole in the swaged top terminal and the hole in whatever lower part that was attached directly to the hole in the chain plate. Enter the measurement into "Table 1" below, in the row marked FL.

You can use the FURLEX CALCULATOR on our web site. Go directly to the calculator by scanning the QR-code with your mobile device or visit www.seldenmast.com.

<table>
<tr><th colspan="2">Table 1: Calculation of forestay wire cutting length</th><th>Your forestay</th><th>Example (104S/Ø5)
with rigging screw 50% extended</th></tr>
<tr><td>FL</td><td>Existing forestay length (FL), including rigging screw (See fig. 2.4.a)</td><td></td><td>10 000</td></tr>
<tr><td>T</td><td>Deduction for lower terminal
<table>
<tr><th>WIRE</th><th>Without rigging screw:</th><th>With rigging screw:</th></tr>
<tr><td>104S</td><td>Ø4 mm wire: 60 mm (2 23/64")
Ø5 mm wire: 65 mm (2 9/16")
Ø6 mm wire: 75 mm (2 61/64")</td><td>Ø4 mm wire: 147 mm (5 25/32")
Ø5 mm wire: 150 mm (5 29/32")
Ø6 mm wire: 155 mm (6 7/64")</td></tr>
</table></td><td>-</td><td>- 150</td></tr>
<tr><td>H</td><td>If links or extra toggles are to be used, deduct this length (H) from FL. (See table 6.7).</td><td>-</td><td>- 0</td></tr>
<tr><td>WL</td><td>Cutting measurement. The new forestay wire is to be marked at this point. (For stays with swaged stud, WL equals the length of the finished stay as shown in fig 2.4.a. and NOT the cutting length)</td><td>=</td><td>= 9850</td></tr>
</table>

2.4 Top extrusions - length calculation

The Furlex luff extrusion consists of a number of shorter pieces. Starting from the bottom there is a 1000 mm luff extrusion connected to the drum unit and extending up to the sail feeder. Then, from the sail feeder and up there are a number of full length luff extrusions (L=2400 mm) and finally there is a top extrusion that has to be cut to length to suite the actual forestay length.

Note! If the calculation gives a top extrusion length (D) that is shorter than 400 mm, the calculation must be reworked by exchanging one of the 2400 mm (94 1/2”) extrusions with the uncut 2000 mm (78 47/64”) top extrusion. By doing so the top extrusion will be cut from a 2400 mm length and its length will then exceed 400 mm (15 3/4”). If the calculation gives a top extrusion length (D) that exceedes 2000 mm (78 47/64), the top extrusion must be cut from one of the 2400 mm (94 1/2”) extrusions. In this case the 2000 mm (78 47/64) extrusion will not be used.

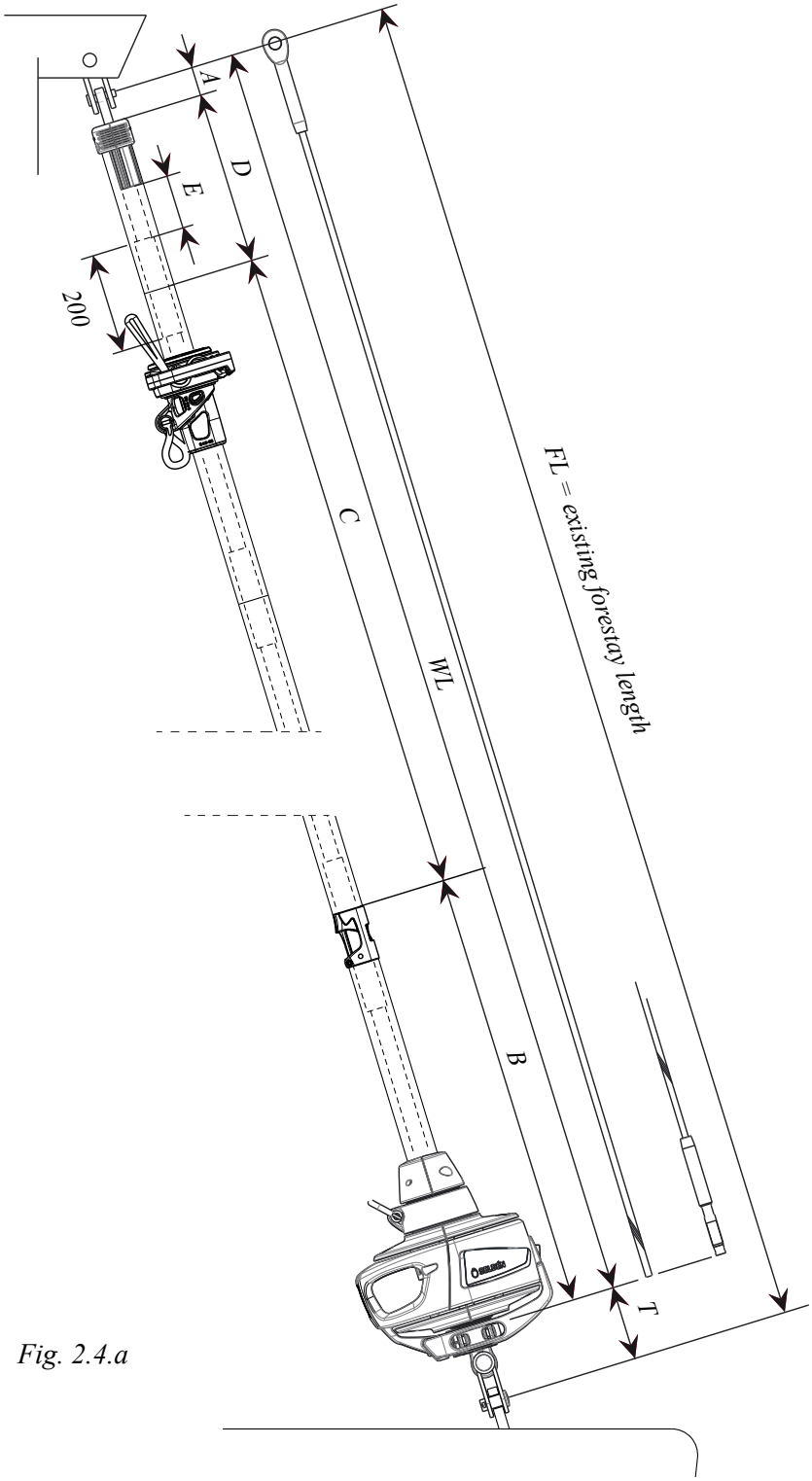

Fig. 2.4.a

To find out the cutting length of the top extrusion (D) and the length of the top distance tube (E), start with the length of the forestay wire (WL) that was calculated in table 1. Then follow the steps in table 2 below. On fixed length forestays, verify WL by measuring the stay length from centre of eye to end of stud (wire).

You can also use the FURLEX CALCULATOR on our web site. Go directly to the calculator by scanning the QR-code with your mobile device.

Table 2: Calculation of top luff extrusion length and top distance tube length		**Your forestay**	**Example (104S/Ø5)** with rigging screw 50% extended
WL	Length of the new forestay wire (as per Table 1).		9850
A+B	**WIRE** / **Without rigging screw:** / **With rigging screw:** **104S** / Ø4 mm wire: 1260 mm (49 39/64”) / Ø4 mm wire: 1175 mm (46 17/64”) Ø5 mm wire: 1275 mm (50 13/64”) / Ø5 mm wire: 1190 mm (46 27/32”) Ø6 mm wire: 1290 mm (50 25/32”) / Ø6 mm wire: 1210 mm (47 41/64”)		1190
N	Number of full length extrusions to be used: N = (WL - (A+B)) / 2400 (94 1/2”)		(9850-1190) /2400=3.6 →N=3
C	Total length of the number of full length extrusions (2400 mm) to be used: C = N x 2400 (94 1/2”)		3 x 2400 = 7200
D*	Length of top luff extrusion: D = WL – (A+B) – C		9850-1190 -7200 = 1460
E*	Length of the top distance tube: E=D-200 (7 7/8”)		1460-200 = 1260

*) If D becomes less than 400 mm it is necessary to recalculate as below and cut one of the **full length luff extrusions** according to D_{new} and one of the **full length distance tubes** according to E_{new}.
Note that the original top luff extrusion and the original top distance tube will now be used as intermediate extrusions.

Table 2B: Recalculation if D<400 mm		**Your forestay**	**Example**
N_{new}	Reduce the number of full length extrusions by one. N_{new} = N-1		
C_{new}	C_{new} = N_{new} x 2400 + 2000 (94 1/2” + 78 47/64”)		
D_{new}	D_{new} = D + 400 (15 3/4”)		
E_{new}	E_{new} = E + 400 (15 3/4”)		

3 Assembly

At this point the top luff section and the top distance tube should be cut to length according to table 2.

3.1 Luff assembly

Luff assembly should be carried out on a clean, flat surface. Make sure there is enough space for the entire forestay length to be stretched out.

Note that the luff extrusions are fitted onto the wire, whereas on previous models the wire was fitted as a last step. Also note that the luff is assembled from top down as opposed to older Furlex systems.

1. Stretch out the wire on a flat, clean surface. On stays with swaged lower terminal, be careful not to damage the terminal thread. The thread can be protected with tape or similar.
2. Start by feeding the top luff extrusion and the top distance tube onto the forestay wire. The distance tubes are welded shut but are easily opened by hand. Note the correct orientation of the distance tube - hinge to be sideways.

Fig. 3.1.a

3. Add a short joining sleeve and use it to push the distance tube up into the top luff extrusion. The distance tube should be pushed in approximately half the length of a joining sleeve.

Fig. 3.1.b

4. On Sta-lok terminated systems, the halyard swivel and the top guard can be fitted at this point, see below. On stud terminated systems, the top guard must be fitted after the sail feeder has been mounted.
5. Add another luff extrusion and another distance tube. Make sure the distance tube is oriented correctly. Also add another short joining sleeve.
6. Fit a short connecting plate into the second luff extrusion as shown. Push the first joining sleeve down into the second luff extrusion to lock the connector.

Fig. 3.1.c

7. Connect the two luff extrusions.

Fig. 3.1.d

8. Push the first joining sleeve back up into the first luff extrusion to lock the join. Use the second joining sleeve to push on the second distance tube. The second distance tube should be pushed in approximately half the length of a joining sleeve. This will ensure correct location of the first joining sleeve.

Fig. 3.1.e

9. Repeat for the remaining 2400 mm (94 1/2”) luff extrusions. Use short joining sleeves only.

10. Fit the long joining sleeve onto the wire. Then fit the short distance tube and finally the short 1000 mm (39 3/4”) luff extrusion. Make sure that the small hole end goes first.

Fig. 3.1.f

11. Connect the same way as previous joins but use the long connector this time. Push the short distance tube in approximately 40 mm (1 37/64”), leaving space for the bearing plug halves, see below.

12. Snap on the sail feeder connector and put the sail feeder in position.

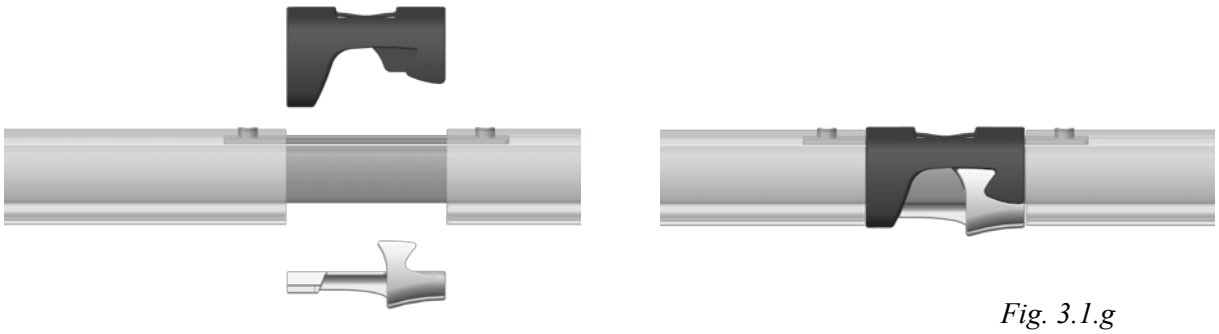

Fig. 3.1.g

13. Fit the halyard swivel from the top and slide it down until it stops on top of the sail feeder. Then fit the top guard and push it into the top luff extrusion until it stops. Secure it with the two pre-fitted screws. Tighten the screws until they bottom, but do not over-tighten.

Fig. 3.1.h

14. Fit the bearing plug halves as shown. Adjust so that the hole in the forward bearing plug aligns with the forward hole in the 1000 mm (39 3/4”) luff extrusion.

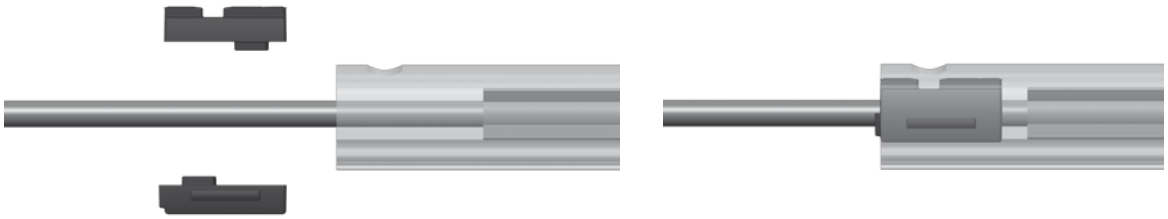

Fig. 3.1.i

This completes the luff assembly. Next step is to fit the lower eye teminal to the stay. There are two types of eye terminals; Stud/Eye terminal and Sta-lok eye terminal (with or without rigging screw).

3.2 Fitting Sta-lok eye terminal

Note! For systems with swaged stud terminal, skip this part and go directly to 3.3.

1.
Before cutting the wire, measure the wire from the centre of the hole in the top swaged eye terminal. Mark the measurement WL carefully on the wire using a marker pen. (The WL measurement was calculated in **"Table 1"**, (Chapter 2.3).

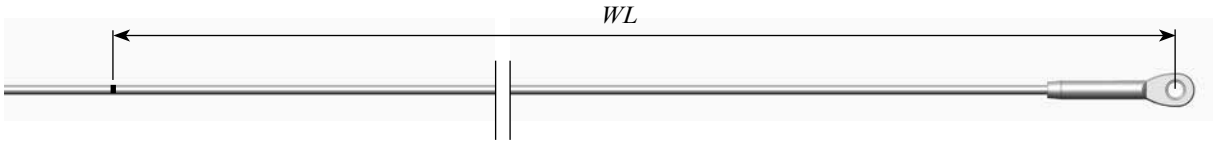

Fig. 3.2.a

2. Put adhesive tape around the wire on both sides of the cutting mark to assist cutting.

3 .

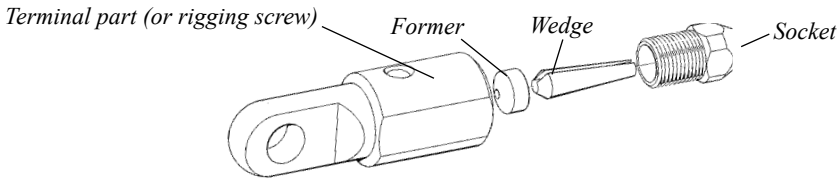

Fig. 3.2.b

Unscrew the socket, wedge and former from the terminal part (or Furlex rigging screw if to be used).

4.

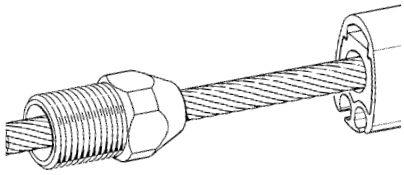

Fig. 3.2.c

Thread the socket onto the wire.

5.

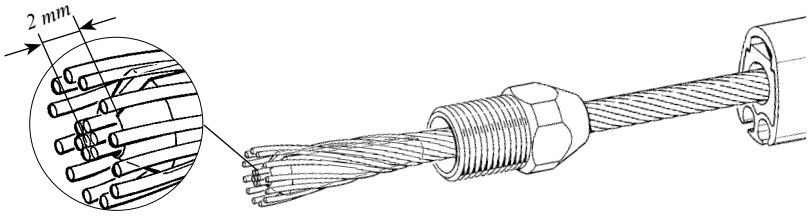

Fig. 3.2.d

Slide the wedge over the core (7 strands) of the wire. The core of the wire should protrude approx. 2 mm (5/64") from the wedge.

6 .
Space the outer strands of the wire evenly around the wedge and bring down the socket so that the strands are held in place. Hold an adjustable spanner between the 1000 mm (39 3/8”) extrusion and the socket.
Tapping the core of the wire, locate it firmly in the socket.
Check that the core of the wire protrudes approx. 2 mm (5/64”) from the wedge. See fig. 3.2.d.

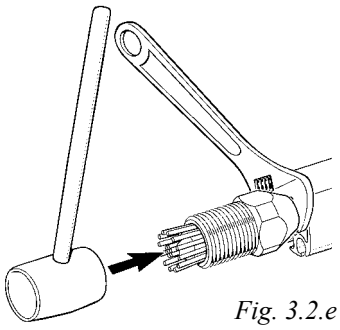

Fig. 3.2.e

NOTE! Check that no strands slip into the slot of the wedge.

7.

Bend the outer strands inwards a little using a pair of pliers, or tap the strands with a small hammer. In the latter case, rest the socket’s thread on a soft surface (wood or similar) to prevent damage.

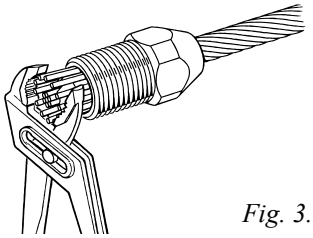

Fig. 3.2.f

8.
Insert the former into the threaded hole of the terminal part (or rigging screw). Lubricate the socket´s thread with a long bead of locking adhesive. Screw the terminal part onto the socket and tighten carefully, forcing the wire further into the terminal.

9.

Unscrew and check that the outer strands are evenly distributed around the wedge. If some strands are crossed, correct their positions.

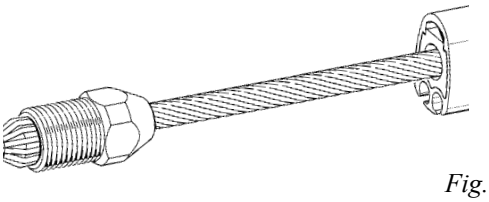

Fig. 3.2.g

NOTE! Check that no strand has slipped into the slot of the wedge!

10.
If assembly is unsuccessful and needs to be repeated, refer to the relevant parts of chapter 6.4 **”Dismantling”**.

11.

Apply another 2 or 3 drops of the locking adhesive to the thread and screw the terminal together, tightening it firmly. The terminal is now permanently locked.

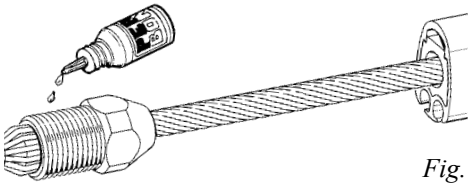

Fig. 3.2.h

3.3 Fitting eye terminal to swaged stud (Stud/Eye)

1. Remove the toggle from the eye fitting.

Fig. 3.3.a

2. Screw the eye terminal part onto the stud terminal until the holes in stud and eye align.

Fig. 3.3.b

3. Fit the spirol spring pin using a hammer to permanently lock the terminal.

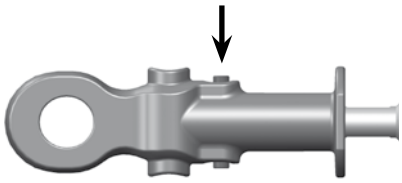

Fig. 3.3.c

3.4 Drum unit assembly

1. Unscrew the two screws holding the adaptor halves together. Take care not to loose the screws.

Fig. 3.5.a

2. Remove the clevis pin that goes through the tube shaft in the drum unit.

Fig. 3.5.b

3. Fit the drum unit over the eye terminal. Orient the drum unit so that the flat surface on the eye terminal meets the two ribs inside the drum unit tube shaft.

   If a Furlex rigging screw is used, the flat faces on all three components must be aligned. As the two ribs on the inside of the tube shaft matches the flat faces, it will securely lock the rigging screw.

   When fitting the drum unit, the rigging screw should be unscrewed halfways.

   Refit the clevis pin through the tube shaft and the hole in the eye terminal. Secure with the split pin.

Fig. 3.5.c

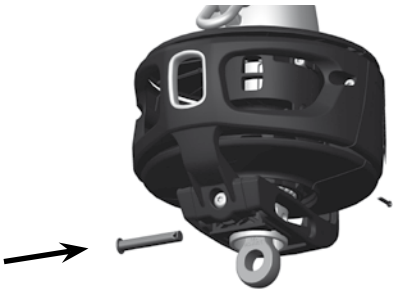

Fig. 3.5.d

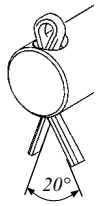

Fig. 3.5.e

4. Fit the adaptor halves. The round boss in the forward adaptor half fits into the hole in the luff extrusion lower end. Note that the halves can be fitted one way only.

   Best practice to fit the adaptor halves is to start by pushing the forward adaptor half onto the luff section ① and then connect to the upper hub ②. When the forward half is in postion, fit the aft half ③ and click the halves together. Make sure that the screws go in smoothly so that the screw threads are not damaged.

   Tighten the screws firmly.

Fig. 3.5.g

5. Refit the toggle. Secure the split pin.

Fig. 3.5.h

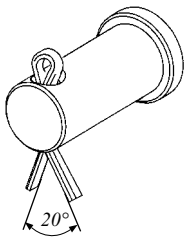

Fig. 3.5.i

4 Installation

Installation of the Furlex system on the boat requires a minimum of two persons, however it is recommended to be at least three persons to do the job more easily.

4.1 Mast attachment

The guiding principle for fitting the Furlex to the mast is that the forestay connection should allow sufficient articulation in all directions. In most cases a toggle must be fitted between the Furlex stay and the forestay attachment. For available toggles and extension links, see chapter “Spares & accessories”.

4.1.1 Halyard routing

The angle between the halyard and the forestay must be at least 15°. If the angle is less than 15°, the halyard may wrap around the luff extrusion when the sail is being furled, possibly damaging the halyard and the luff extrusion. Failure to observe what is happening in this situation may even result in damage to the forestay wire.

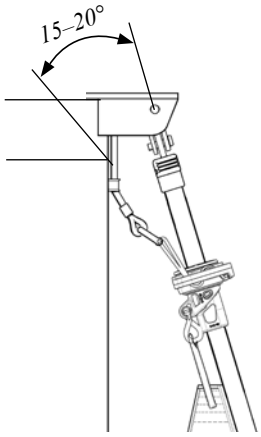

Fig. 4.1.1.a

Before installing the Furlex on the boat, make sure that the 15–20° requirement is fulfilled. On new Seldén masts this is usually not an issue but on older masts - or masts of other brands - it may be necessary to fit halyard leads or to fit a new halyard box.

The Extended Pack includes two halyard leads. These are easy to install and fit on most mast brands. If a wire halyard is used, halyard leads should be inspected once a year and any sharp edges smoothed with a file. The halyard lead should be replaced when wear reaches 50%.

Alternatively, a sheave box can be fitted to the mast to meet the 15–20° requirement. Installation is more complicated but the box will eliminate the need to replace the halyard leads as they wear. Sheave box kits (with assembly instructions) can be obtained from your Seldén dealer.

If the boat is equipped with a spinnaker halyard, this must be kept clear of the Furlex-system when not in use to avoid halyard wrap. An effective solution is to lead the halyard around the upper shroud and then down aft of the spreaders.

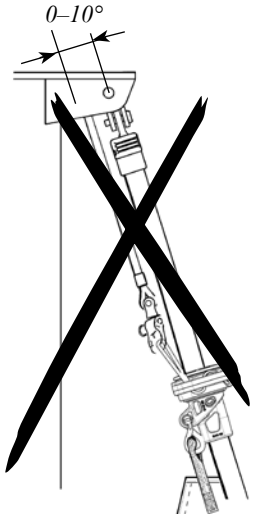

Fig. 4.1.1.b

4.2 Deck attachment

The lower end of the Furlex-system comes with a fork toggle as standard. This can normally be attached directly to the boat's forestay fitting at the stemhead. Check that the drum unit does not interfere with the pulpit, navigation lights or other deck fittings.

For the furling line to be wound evenly onto the line drum, the first turning point (stantion block) must be at least 300 mm (11 13/16") away. The tack should be located as close to deck level as possible.

If the boat is fitted with a bow anchor, it may be necessary to permanently raise the drum unit to give the crew sufficient space for anchor work.

If the drum unit is raised by means of an extension link, a toggle must be fitted between the link and the boat's forestay attachment at the stemhead.

For available toggles and extension links, see chapter "Spares and accessories".

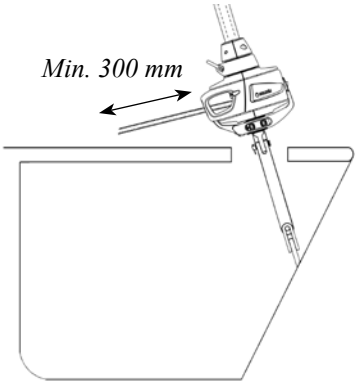

Fig. 4.2.1.b

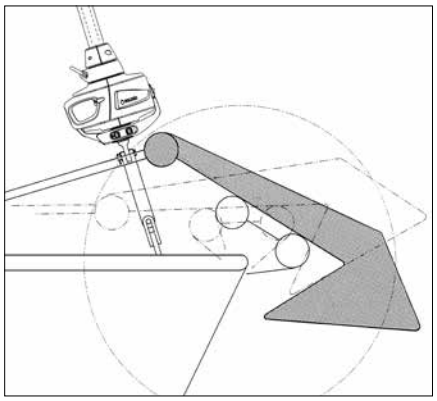

Fig. 4.2

4.2.1 Attachment below deck

The furling unit can be fitted below deck inside an anchor well. The advantage is that the sail's luff length is maximized and the access around the forestay is improved. The disadvantage is a more complicated route for the furling line resulting in increased furling resistance. The diagrams below illustrate various methods of installation.

Regardless of which option is chosen, the Furlex-system must always be kept clear of the deck well's inside surfaces.

Avoid routing the line through an integral deck conduit, as this will increase the friction on the furling line.

Use a large ball bearing block to minimize friction losses.

The anchor well must be well drained.

If the Furlex is fitted above deck, but with the forestay fitting in the anchor well, a Furlex extension toggle can be used. For larger distances, use a custom made stainless steel bar or rod stay. For available toggles and extension links, see chapter "Spares and accessories".

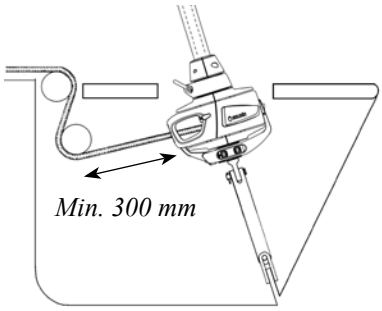

Fig. 4.2.1.a

4.3 Installation on a stepped mast

1. Slacken the backstay as much as possible, but do not remove it.
2. Pull the mast forward using a genoa halyard or a spinnaker halyard. Secure the halyard to a strong deck fitting using a screw pin shackle or tie the halyard to a strong deck fitting. For safety reasons, do not use snap shackles.
3. Tie a strong, not too stiff, rope around the luff extrusion. Make two clove hitches and tape the knots over carefully so that they cannot slide.
4. Hoist the stay using a spare halyard.
5. ”Go aloft” and attach the top end of the Furlex-system to the forestay attachment. Always use a proper bosun’s chair. If there are no free headsail halyards, use the main halyard. For further information, see the ”Working aloft” section in the brochure ”Hints and Advice” that can be downloaded from www.seldenmast.com.
6. Finally attach the stay to the forestay attachment in the boat at the stemhead.

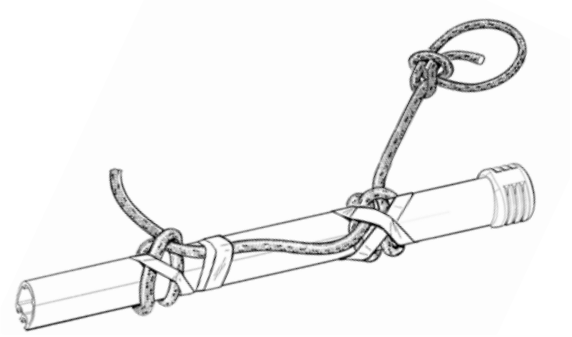

Fig. 4.3

4.4 Installation on an un-stepped mast

1. Lay the dressed mast on trestles with the front facing up.
2. Connect the top end of the Furlex-system to the forestay attachment on the mast. Make sure that the stay is free to move in all directions.
3. Lift the mast in the crane with the Furlex-system lying on the leading edge of the mast.
4. Have one person watching the Furlex-system to ensure that it does not get caught when lifting the mast.
5. Keep the end of the stay outside the deck area in order to avoid damage.
6. Attach the stay to the chain plate in the boat at the stemhead. Make sure that the stay is free to move in all directions.

4.5 Furling line installation

The furling line is best fitted to the drum unit with cover and line guide removed.

4.5.1 Removing line guide fitting and cover

1. Start by loosening the screw on the underside of the drum unit a few turns. Then loosen the two smaller screws on each side of the line guide fitting until the line guide fitting and cover seperates. Remove the line guide fitting. It may be necessary to loosen the screw on the underside a few extra turns for the line guide fitting to come off.
2. Pull out the lock block.
3. Remove the cover.

①

Fig. 4.5.1.a

②

Fig. 4.5.1.b

③

Fig. 4.5.1.c

4.5.2 Fitting the furling line

If the sail's ultraviolet (UV) protection is fitted on the starboard side of the sail, the furling line should exit on the port side of the line drum. If the UV protection is fitted on the port side, the furling line should exit on the starboard side of the line drum.

Use an awl or similar tool to make a hole in the rope 10-15 mm (25/64" - 19/32") from the rope end and fit the screw through the hole. Make sure that the washer is fitted under the screw head, then tighten the screw firmly. Use locking adhesive on the screw thread. Refit cover and line guide by doing a reverse dismantling, see previous section.

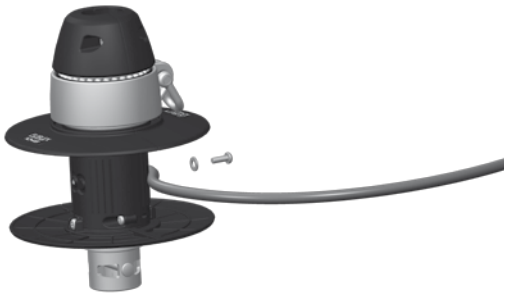

Fig. 4.5.2.a

To wind the line onto the drum, turn the luff extrusion by hand and wind approximately 30 turns onto the line drum. Wind the line onto the drum before hoisting the sail.

The line should be led aft to the cockpit via lead blocks. Lead blocks are included in the Extended Pack. The lead blocks are normally mounted on the pulpit and on the stanchions leading the line back to cockpit.

The forward lead block is fitted so that the furling line exits the line guide fitting in a straight line. Ease the screw on the underside of the drum unit a little to be able to make the adjustments. Also adjust the line guide and cover height so that the drum is allowed to rotate freely. Tighten the screw firmly when finished.

Fig. 4.5.2.b

The final turning block by the cockpit needs to be matched individually to each boat depending on the attachment points, the line arrangement chosen and possibly also the type of other blocks on the boat. We recommend a swivel block which is free to self-align. The maximum working load of the block should not be less than 3000 N (300 kg/ 660lb).

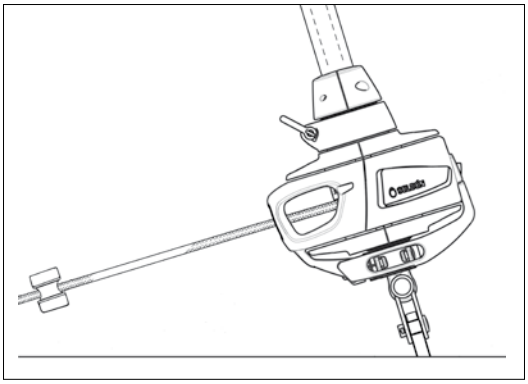

Fig. 4.5.2.c

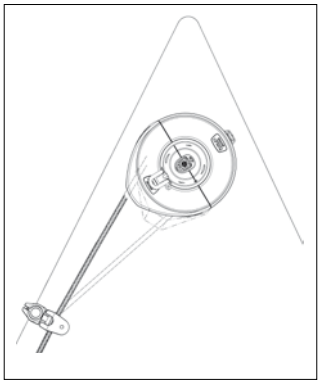

Fig. 4.5.2.d

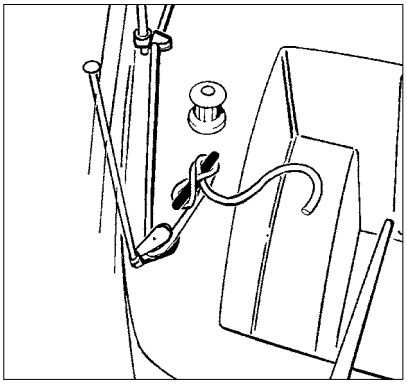

Fig. 4.5.2.e

4.6 Adjusting the forestay length

The Furlex system may be supplied with or without an integrated rigging screw.

4.6.1 Furlex with rigging screw

With an integral rigging screw, the forestay length can be easily adjusted. **Tensioning** the forestay however, is done by tensioning the cap shrouds and/or the backstay, and not by tensioning the forestay rigging screw.

The sail must be removed or unfurled and halyard slackened before the forestay length can be adjusted. Then follow the steps below:

1. Unscrew the two screws that hold the adaptor halves together. Pull the adaptor halves apart. The adaptor halves go into, and support, the luff extrusion. Grip the luff extrusions to support their weight as the halves are removed. When the adaptor halves are removed, allow the luff extrusions to slide down.
2. Remove the split pin and the clevis pin that connects the drum unit to the terminal assembly.

Fig. 4.6.1.a

> **Do not remove the clevis pins that connect the forestay to the boat!**

3. Slide the drum unit up over the luff extrusion to expose the rigging screw. Take care not to scratch the foil. Use cloth or paper for protection.
4. Secure the drum unit in this position, for example by using a spare halyard connected to the tack ring shackle.
5. Place one wrench over the flat faces of the wire terminal and another wrench over the flat faces of the rigging screw body. Adjust the rigging screw length by turning the body of the rigging screw until the desired forestay length is obtained. **Do not turn the wire terminal (upper wrench)!**

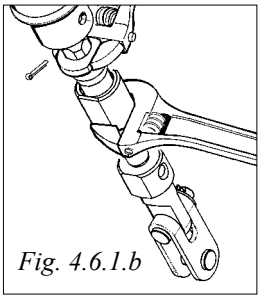

Fig. 4.6.1.b

> **The rigging screw has a stop at the maximum position to which it can be unscrewed. Do not overload this stop by trying to unscrew the rigging screw further.**

6. Re-adjust so that the flat faces of the wire terminal and rigging screw body are aligned.
7. Lower the drum unit and secure with clevispin and split pin. As the inside of the furling unit matches the flat faces of the rigging screw unit, it will lock the rigging screw when fitted.
8. Re-fit the adaptor halves. The halves can only be fitted one way. Tighten the screws firmly.

4.6.2 Furlex without rigging screw

On Furlex-systems without an integrated rigging screw, the forestay length can be increased by fitting extra toggles. These can be fitted at the upper or lower end of the forestay wire.

To shorten the Furlex-system, the forestay wire and the luff extrusion must be cut. See chapter ”Dismantling” and ”Assembly”.

For available toggles and extension links, see chapter “Spares and accessories”.

4.7 Checklist

Go through the checklist below and make sure that all the important steps have been carried out. This will ensure that the Furlex system functions safely and reliably for many years and in all conditions.

- Check that the angle between the halyard and forestay is 15-20° when the sail is hoisted.
- Check that the clearance between the halyard swivel and the top guard is at least 50 mm (1 31/32”).
- Check that all the sails used, have the sufficient luff length or an extension pendant fitted so that the 15-20° requirement is satisfied.
- Check that no halyards can get caught in the halyard swivel or wrapped around the luff extrusion.
- Check that the line guide eye does not deflect the furling line too much, as this can cause excessive friction and wear.
- Check that the luff extrusion rotates one turn before the tack ring starts to rotate.
- Check that the line guide fitting does not come in contact the line drum flanges when furling.
- Check that the forestay articulates freely at the upper and lower attachments.
- Check that all split pins are secured properly by a 20º separation.

5 Operation

Before hoisting the sail, make sure to tension backstay and/or runners so that the forestay is fully tensioned for hard, close-reach sailing.

If the sail should be hoisted and firmly tensioned *before* the forestay is fully tensioned, excess strain is put on the halyard, the halyard swivel and the sail when the forestay is tensioned. This may cause damage to the halyard, the halyard swivel and/or the sail. It will also stop the system from rotating properly.

Also make sure that the drum is loaded with sufficient amount of rope – approximately 30 turns but this depending on the foot length of the sail.

5.1 Hoisting

1. Lay the sail out on deck. It should be carefully flaked down with the tack turned forward.
2. Turn the tack ring counter-clockwise if the furling line exits on the port side of the drum, or clockwise if it exits on the starboard side. Doing this right is important as it ensures that the free-turn function works properly and the sail shape is kept flat when reefed.
3. Attach the tack of the sail to the tack shackle.
4. Attach the sheet to the clew.
5. If included, tie the pre-feeder to the tack shackle and insert the luff rope in the pre-feeder.
6. Attach the halyard to the upper eye of the halyard swivel.
7. Hoist the sail in the correct groove through the sail feeder. If the furling line exits on the port side of the line drum, the sail should be hoisted in the starboard groove and vice versa. Hoisting the sail in the ”right” groove reduces initial resistance when furling the sail.
8. Hoist the sail. The pre-feeder helps guide the sail in towards the sail feeder at a small angle. If the pre-feeder is not included, then feed the sail manually through the sail feeder.
9. Tension the halyard until a vertical crease appears in the luff of the sail, then slacken off until the crease disappears.
10. After hoisting the sail, remove the pre-feeder completely.
11. Furl the sail by pulling on the furling line. Let the windward sheet run freely but keep some tension in the leeward sheet, for example by placing a turn around a winch. It is important to furl the sail tightly and evenly, as a sail that is furled too loosely may partly blow out in strong winds.
12. Check the number of turns of the furling line remaining on the line drum when the sail is fully furled. There should be at least 3–5 turns. To adjust the number of turns, furl the sail and detach the sheets. Then turn the luff extrusion by hand until 3–5 turns are left on the drum and re-attach the sheets. When furling in strong winds, the sail will roll more tightly, requiring more turns left on the line drum. Therefor make sure to always have sufficient turns left on the drum.
13. When the sail is hoisted, check that the halyard swivel is at least 50 mm (1 31/32”) below the top guard and that the halyard angle satisfies the 15–20° requirement.
14. Finally, mark the halyard as shown to prevent overtensioning. this is very important! Also mark the maximum tension position of any backstay adjuster. The forestay/backstay tension can now be adjusted without putting too much strain on the halyard.

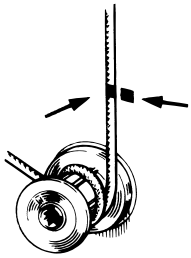

Fig. 5.1.a

5.2 Unfurling the sail

1. Release the furling line and the windward genoa sheet. Allow these to run freely while the sail is being unfurled.
2. For a controlled unfurling manoeuvre, it is best to place a turn of the furling line around a winch or a half-turn around a cleat. This induces some drag, which is particularly useful in stronger winds.
3. Place a turn of the leeward genoa sheet around a winch and unfurl the sail by pulling in the sheet. Once the wind catches the sail it will unfurl more easily. The best point of sail for unfurling is between close reach and beam reach, as the wind will then fill the sail quickly.
4. Place a few more turns of the sheet around the winch and sheet the sail in to the desired trim.

5.3 Furling the sail

1. Release the windward sheet and ensure that it can run freely.
2. Furl the sail by pulling the furling line. Release the leeward sheet but keep a little tension on it, for example by placing a turn around a winch. It is important to furl the sail tightly and evenly, as a sail which is furled too loosely can blow out a little in strong winds. If the boat is left unattended, the sail may flap until it tears. A very loosely furled sail may also cause unnecessary wear, as the sail roll will swing back and forth in the wind.
3. Belay the furling line carefully. If the boat is left unattended, the furling line should be belayed on a cleat for safety.

If the furling line is accidentally released, the sail may unfurl and flap uncontrollably in strong winds. If left for any length of time, it could be damaged beyond repair!

If the boat is left for a long period of time, it is a good idea to take down the sail and stow it below deck. It is then protected from UV radiation and dirt. Alternatively, a sail cover (”furling sock”) can be used to protect the sail.

5.4 Reefing

Furlex is provided with a tack attachment which rotates in relation to the luff extrusion. When furling and simultaneously applying a limited countertension in the sheet, the luff extrusion makes approximately one revolution before the tack fitting starts rotating as well. The part of the sail with the biggest draft will in this way be flattened. This makes the sail flat as the furling is continued. This funtion is referred to as the ”Free turn”.

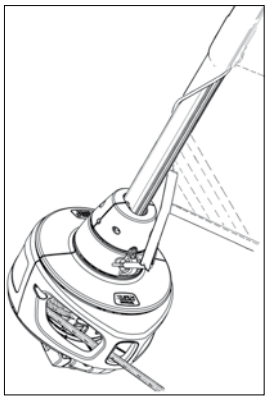

Fig. 5.2.a

The best point of sail for reefing is on a close reach to beam reach. The wind will then partly fill the sail and help to improve its shape when reefed.

If using a winch for the furling line, first check that there is no obstruction which may interrupt the furling operation and possibly cause damage.

How to reef:

1. Slacken off the leeward sheet until the sail just begins to flap along the luff.
2. Pull in the furling line so that the sail is furled and flattened out. Gradually slacken the sheet when furling.
3. Belay the furling line.

When the sail is reefed, it may be necessary to adjust the sheeting position.

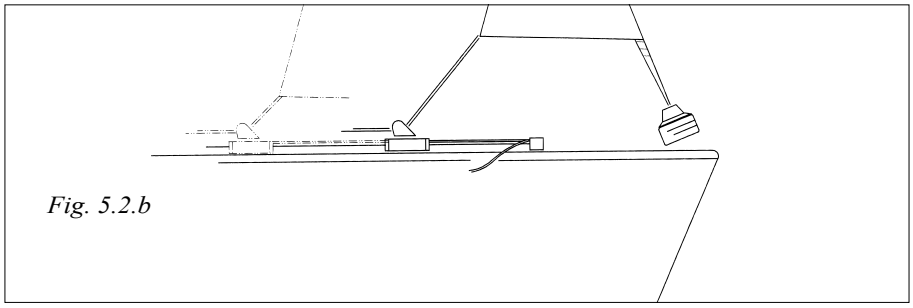

Fig. 5.2.b

5.5 Racing

The Furlex can easily be reconfigured from a furling jib system to a twin-groove headfoil. The sail can then be tacked at deck level, enabling the full hoisting length of the headfoil to be utilized.
The twin luff grooves offer the option of quick sail changes.

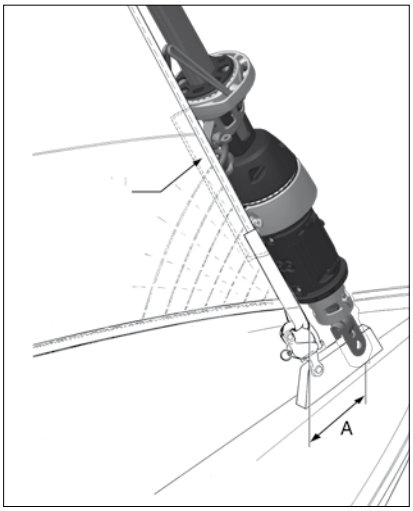

Dismantle the line guide, cover and line drum brims as described in chapter ”Dismantling”. The sail feeder is also removed and the halyard swivel moved down to the furling unit. Then re-fit the sail feeder and your Furlex is ready for racing!

To avoid chafe between the sail and drum unit, make sure there is enough distance between the forestay attachment and the forward edge of the tack [A].

For added protection, or if the [A] dimension cannot be achieved, fit extra reinforcement to the sail where chafing may occur.

Alternatively, the drum unit and halyard swivel can be removed from the system completely by detatching the forestay at the stemhead.
See chapter ”Dismantling” for further instructions.

6 Maintenance

6.1 Inspection

To ensure that the system rotates easily and functions satisfactorily year after year, regular inspection and maintenance should be carried out. This should be done once a year. Maintenance is simple, even with the Furlex rigged on the boat.

Inspection points:

- Check for damages on the luff extrusion. If the sail grooves are damaged this may cause damage to the sail.
- Check that all rotating parts turn freely and that all bearings are greased. Lubricate with water resistant Furlex grease if bearings seem dry.
- Halyard leads should be inspected once a year and any sharp edges smoothed with a file. A halyard lead should be replaced, at the latest, when wear exceeds 50%.

6.2 Service

Wash and rinse the entire Furlex-system with fresh water and a mild detergent to remove dirt and salt.
Note! Some detergents contain substances which can cause aluminium to corrode, so it is important to rinse all detergent off thoroughly.

When the parts have dried, the anodized surfaces of the luff extrusions can be treated with a silicon free boat polish or wax. This offers good protection and prevents particles of dirt from adhering and then soiling the sail. The stainless steel components can be treated with a suitable polish. Always protect black plastic when polishing stainless compontents.

Lubricating points:

- Remove the brims and lubricate all four ball bearings in the lower unit with water resistant grease.
  ① Main upper bearing. ② Lower main bearing.
  ③ Tack ring bearings.
- Bring the halyard swivel down to the sail feeder and lubricate both ball bearings ④ with water resistant grease.

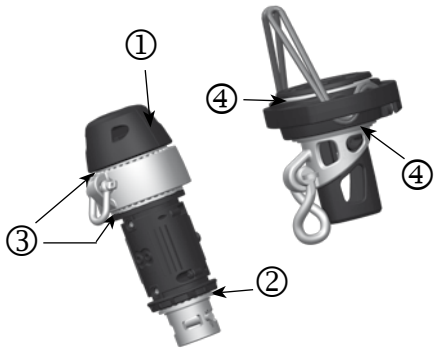

Fig. 6.2.a

6.3 Storage

The Furlex-system is preferably stored with the mast when the mast is down. Make sure that no aluminium surfaces are in contact with steel parts.

The drum unit and the halyard swivel can easily be removed from the system, see chapter ”Dismantling”. This will make it easier to tie the foil to the mast.

Under no circumstances should an unwashed or damp Furlex system be wrapped in plastic or any other impervious material.

In areas where frost can occur, the Furlex should be stored in a dry place or with its centre extrusions raised. This is to avoid ice damage to luff extrusions at sub-zero temperatures.

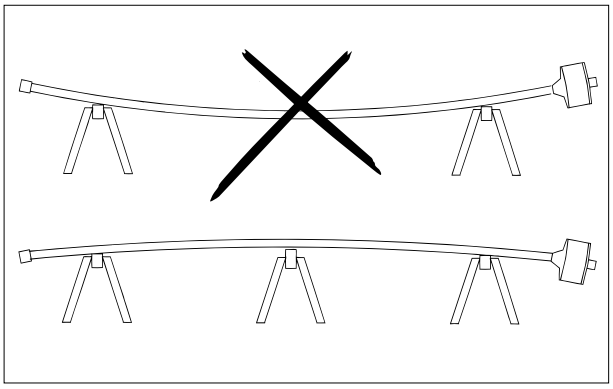

Fig. 6.3.a

6.4 Dismantling

Never take the halyard swivel or the drum unit apart as you will find it difficult to re-assemble them correctly. (The ball-bearings are loose and difficult to refit!) Contact your Furlex dealer if service is required.

6.4.1 Sail feeder

1. 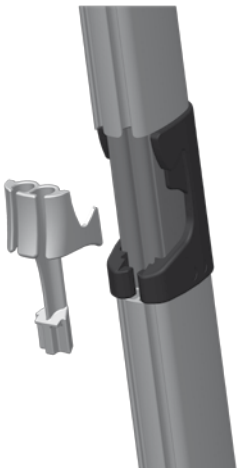 *Fig. 6.4.1.a*	2. 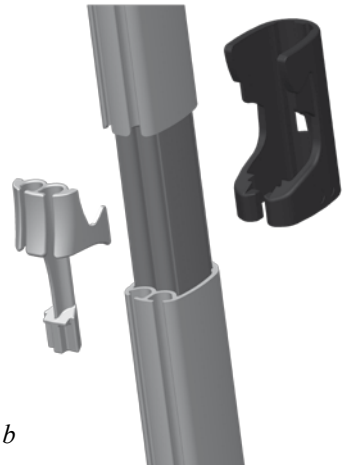 *Fig. 6.4.1.b*
Bend open the connector slightly and pull out the sail feeder - lower end first.	Bend the connector open and remove it.

6.4.2 Line guide and cover

1. Start by loosening the screw on the underside of the drum unit a few turns. Then loosen the two smaller screws on each side of the line guide fitting until the line guide fitting and cover seperates. Remove the line guide fitting. It may be necessary to loosen the screw on the underside a few extra turns for the line guide fitting to come off.

2. Pull out the lock block.

3. Remove the cover.

①

Fig. 6.4.2.a

②

Fig. 6.4.2.b

③

Fig. 6.4.2.c

6.4.3 Brims

Loosen the two screws and pull the brims off the drum unit.

Fig. 6.4.3.a

6.4.4 Lower bearing unit

1. Unscrew the two screws holding the adaptor halves together. Take care not to loose the screws.
2. Remove the clevis pin that goes through the tube shaft in the drum unit.
3. Remove the toggle.
4. The lower bearing unit can now be slid down over the eye terminal and removed.

Note. The complete drum unit can be removed in the same way with brims, line guide and cover still in place.

If the drum unit is to be removed, the rig must first be secured safely using a halyard as a substitute for the forestay before proceeding. After disconnecting the system from the boat's stemhead, the drum unit can be slid down over the terminal or rigging screw and removed.

Fig. 6.4.4.a

6.4.5 Sta-lok terminal

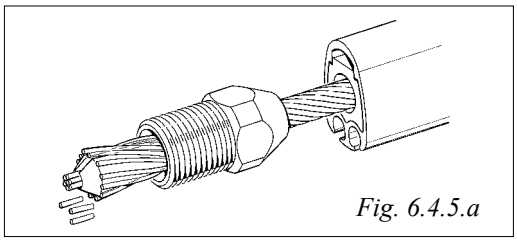

Fig. 6.4.5.a

1. To remove the Sta-lok eye, heat up the thread to release the locking adhesive.
2. Remove the terminal part (or rigging screw) from the socket.
3. Remove the former from the bottom of the terminal part.
4. Fit the terminal part, then loosen it 2 turns.
5. Tap on the end of the terminal part (or rigging screw) so that the socket is pushed up along the wire. If possible, fix the wire in a vice or use a large pipe wrench or similar tool. There should be at least 10 mm of free wire between the top of the socket and the jaws of the vice. Be careful to protect the wire against damage by the vice or wrench jaws.
6. Unscrew the terminal part again.
7. Cut all wire strands protruding outside the wedge at the bend by approx. 5 mm (13/64”).
8. Prise the wedge apart slightly by inserting a small screwdriver into the slot and turning. Tap on the screwdriver so that the wedge slides off the wire.
9. Twist the wire strands into the correct positions around the core (counter-clockwise when seen from underneath) and remove the socket.
10. The wire can now be pulled out of the luff extrusion.

Prior to reassembly of the Sta-lok wire terminal:

1. replace the used wedge with a new.
2. Cut the wire core flush with the outer strands. Remove any burrs with a file.

6.4.6 Stud/eye terminal

1. Drive out the locking pin.
2. Unscrew the eye terminal from the stud terminal.

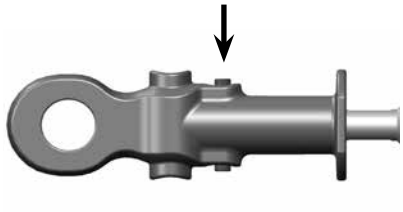

Fig. 6.4.6.a

6.4.7 Top guard

1. Remove the screws.
2. Pull out the top guard halves.

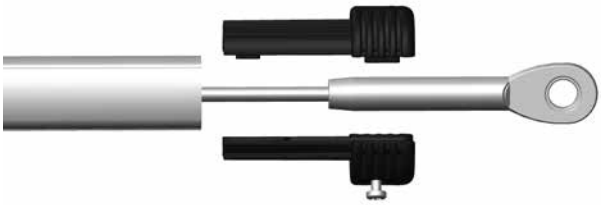

Fig. 6.4.7.a

6.4.8 Halyard swivel

The halyard swivel is removed from the system by sliding it downwards in conjunction with dismantling the sail feeder and removing the drum unit.

Alternatively, the halyard swivel can be slid up after the top guard has been removed.

In both cases the stay needs to be detached from the boat.

Fig. 6.4.8.a

If the halyard swivel is to be removed, the rig must first be secured safely using a halyard as a substitute for the forestay before proceeding. After disconnecting the system from the boat's stemhead, the drum unit and halyard swivel can be slid down over the terminal or rigging screw and removed.

6.4.9 Luff extrusion

Drum unit and eye lower terminal must be removed before the luff extrusion can be dismantled.

1. Place the Furlex on a flat surface and make sure that the luff extrusion is kept straight.
2. Push out the lower bearing halves using a screw driver or similar. Be careful not to damage the hole in the luff extrusion.

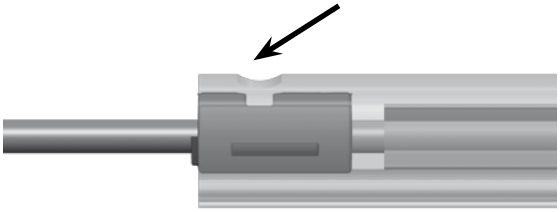

Fig. 6.4.9.a

3. Remove sail feeder and top guard.
4. Feed the exposed lower joining sleeve (at sail feeder level) down to release the lower connector and split the join. The lower 1000 mm (39 3/8") luff extrusion and distance tube can now be removed.
5. Use the disconnected joining sleeve to push up all the the remaining distance tubes and joins until all joins disconnect. Hold tight on the luff extrusion while knocking on the joining sleeve with a hammer. Use a piece of wood or similar so that the joining sleeve is not damaged.
6. Collect the connectors at each join and pull out the wire.

6.5 Troubleshooting

	Problem	Probable cause	Action
6.5.1	”The sail will not unfurl or will only partly unfurl.”	• The jib halyard is wrapped around the luff extrusion.	• Ease the halyard slightly and try to reverse the system.
		• Another halyard is wrapped around the luff extrusion.	• Furl the system. Free the halyard.
		• The halyard shackle/knot interferes with the top extrusion.	• Make sure tht the 15-20º requirement is fulfilled. Check that the shackle/knot arrangement is not too ”bulky”.
		• The furling line is not free to run or has become tangled.	• Slacken or free the furling line.
		• The forestay is too slack.	• Tension the forestay, first of all by tensioning the backstay and/or the cap shrouds. If this doesn’t help, decrease the length of the Furlex-system.
		• Dirt and salt in the bearings.	• Rinse the bearings with fresh water and lubricate with Furlex grease.
		• Too much strain on the halyard.	• Ease the halyard off.
6.5.2	”The sail will not furl, is hard to furl or can only be partly furled”	• The jib halyard is wrapped around the luff extrusion.	• Ease the halyard slightly and try to reverse the system. Arrange proper halyard angle, chaper 4.1.1.
		• Another halyard is wrapped around the luff extrusion.	• Unfurl the system. Free the halyard.
		• The halyard shackle/knot interferes with the top extrusion.	• Make sure tht the 15-20º requirement is fulfilled. Check that the shackle/knot arrangement is not too ”bulky”.
		• There is no line left on the drum.	• Unfurl the sail. Take it down and wind more line on the drum. Alternatively, loosen the sheet, gather the sail around the system and wind more line onto the drum.
		• The forestay is too slack.	• Increase forestay tension.
		• Excessive wind pressure on the sail.	• Let the leeward sheet off more.
		• Windward sheet is not released.	• Release the sheet.
		• The sheet has become tangled.	• Sort out the sheet.
		• The free turn is not functioning.	• Rinse the bearings with fresh water and lubricate with Furlex grease.
		• Large turning angles in the furling line route which increase friction.	• Reroute the furling line, avoiding large turning angles.
		• Dirt and salt in the bearings.	• Rinse the bearings with fresh water and lubricate with Furlex grease.
		• The furling line has become tangled on the drum.	• Unfurl the sail and take it down. Rewind the furling line. Unfurl the sail with slight drag on the furling line in the future and avoid having too much line on the drum.
		• The line guide fitting chafes against the drum.	• Loosen the fastening screw below the drum and adjust the fitting.
		• The halyard swivel is upside down.	• Fit the halyard swivel correctly.
		• Too much strain on the halyard.	• Ease the halyard off a little.
6.5.3	”The system ‘wobbles’ when furling and unfurling”	• The forestay is too loose.	• Tension the backstay and/or the cap shrouds. This will tension the forestay.
6.5.4	”The sail unfurls after reefing or furling”	• The sail is not furled tightly enough.	• Furl with some drag on the line.
		• The furling line is not belayed.	• Furl and belay the furling line.

6.5.5	”The sail is hard to hoist”	• The luff tape is too thick.	• Return the sail to the sailmaker and refer to the sailmaker information in this manual.
		• The sail is caught on something or is not sufficiently loose on the foredeck.	• Arrange the sail better on the foredeck.
		• Fault in halyard routing.	• Check the sheaves, winch etc.
		• Dirt and salt in the luff groove.	• Clean the luff groove.
6.5.6	”The luff cannot be tensioned”	• The halyard swivel comes into contact with the top guard.	• The luff of the sail is too long. Have the sail shortened by a sailmaker.
		• The angle between the forestay and the halyard is too great.	• Shorten the sail or move the halyard lead up.
6.5.7	”The sail cannot be taken down”	• The halyard is wrapped around the top of the luff extrusion.	• Ease the halyard off and try to reverse the system.
		• The halyard wraps around the luff extrusion as the sail is coming down.	• Tension the halyard manually keeping a slight drag on it while taking the sail down.
		• The halyard is stuck.	• Check the halyard routing (sheaves, stoppers etc).
6.5.8	”The sail’s UV protection is on the inside of the furled sail”	• The furling line is wound on the drum in the wrong direction.	• Remove the sheet from the sail and gather the sail around the Furlex-system with a rope. Pull on the line until the drum is empty. Wind a couple of turns onto the drum by hand in the opposite direction. Re-attach the sheet and unfurl the sail. Furl in and check that there are 3-5 turns left on the drum when the sail is fully furled in.
6.5.9	”The sail is wrinkled at the tack”	• The tack ring was turned in the wrong direction before tacking the sail.	• Unfurl the sail and ease off the halyard. Undo the tack snap shackle. Rotate the tack ring ”around the system” and retack the sail. Furl slowly and check that the furling of the tack is retarded by one revolution in relation to the luff extrusion.
		• The sail is old or incorrectly cut.	• Consult your sailmaker.
6.5.10	”The leach flogs despite sheeting hard”	• Incorrect sheeting point.	• Move the sheeting point forward.
		• Incorrectly tensioned leach line.	• Adjust the leach line (Consult your sailmaker).
		• The sail is old or incorrectly cut.	• Consult your sailmaker.
6.5.11	”The leach closes (bend inwards)”	• Incorrect sheeting point.	• Move the sheeting point backwards.
		• The sail is old or incorrectly cut.	• Consult your sailmaker.

6.6 Spares & Accessories

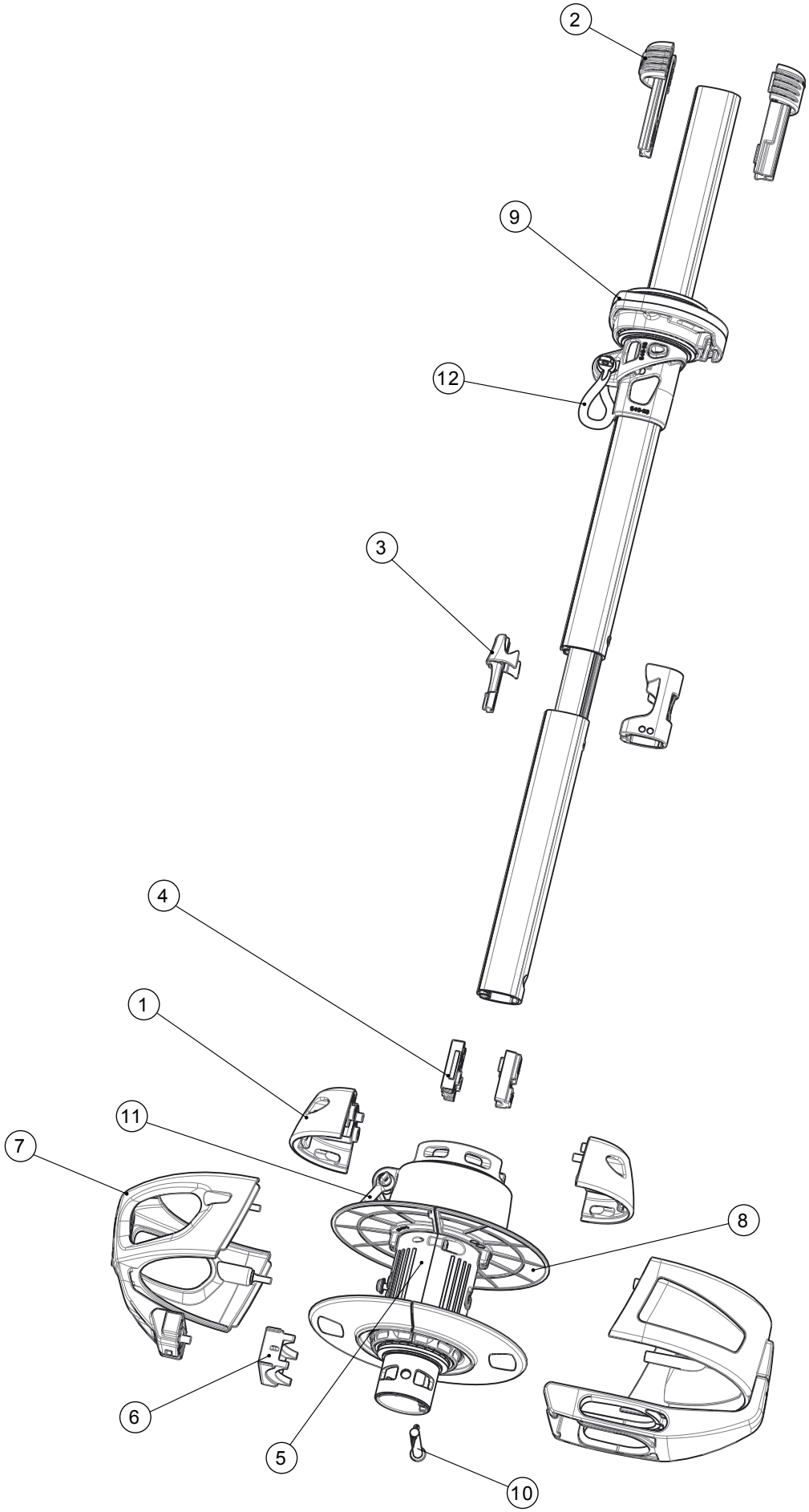

		Serie 104S				
				Forestay wire size		
	Description	**Dimension**	**Qty**	**Ø4 mm**	**Ø5 mm**	**Ø6 mm**
1	Adapter assembly	incl. screws	1	549-104-01R	549-104-01R	549-104-01R
2	Top guard	incl. screws	1	549-125-01R	549-125-01R	549-125-01R
3	Sail feeder	-	1	549-123-01R	549-123-01R	549-123-01R
4	Lower bearing	-	1	549-119-01R	549-119-01R	549-119-01R
5	Drum unit	incl. shackle, clevis pin and split pin	1	549-100-10R	549-100-10R	549-100-10R
6	Lock block	-	1	549-111-01R	549-111-01R	549-111-01R
7	Cover assembly	incl. lock block and screws	1	549-109-10R	549-109-10R	549-109-10R
8	Brim assembly	two brims incl. screws	1	549-107-01R	549-107-01R	549-107-01R
9	Halyard swivel	incl. shackle	1	549-116-01R	549-116-01R	549-116-01R
10	Clevis pin and split pin	-	1	165-008-01R	165-008-01R	165-008-01R
11	Screw pin shackle	M8x16x32	1	307-086R	307-086R	307-086R
12	Twisted screw pin shackle	M8x16x32	1	307-023R	307-023R	307-023R
-	Spare screw kit	-	1	155-807-10R	155-807-10R	155-807-10R

1.	2.	3.	4.
5.	6. 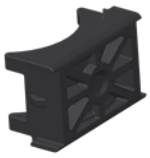	7.	8.
9.	10.	11. 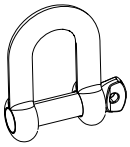	12. 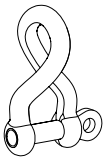

		Serie 104S				
				Forestay wire size		
	Description	**Dimension**	**Qty**	**Ø4 mm**	**Ø5 mm**	**Ø6 mm**
13	Furlex grease	~100g	1	312-501	312-501	312-501
14	Furling line	Ø8 L=20000	1	612-034-12	612-034-12	612-034-12
15	Stanchion block, 1-pack	For Ø25	1	538-971-01	538-971-01	538-971-01
16	Prefeeder pack	-	1	505-538-01R	505-538-01R	505-538-01R
17	Locking adhesive	~1g	1	312-305	312-305	312-305
18	Soft shackle	5 (3) mm	1	614-521R	614-521R	614-521R
19	Connecting plate kit	1 long + 5 short	1	549-127-10R	549-127-10R	549-127-10R
20	HMPE strop	-	1	613-051-20R	613-051-20R	613-051-20R

13.	14. 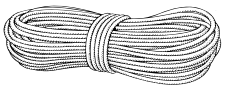	15. 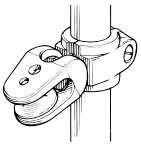	16. 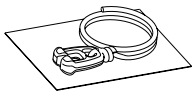
17.	18.	19. 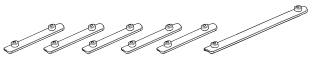	20.

Wire pack & eye fitting pack

		Serie 104S				
				Forestay wire size		
	Description	**Dimension**	**Qty**	**Ø4mm**	**Ø5mm**	**Ø6mm**
-	Forestay wire pack	L = 10500	1	601-002-64	601-003-64	601-004-64
		L = 12900	1	-	601-003-65	601-004-65
-	Forestay compact wire pack	L = 10500	1	601-052-64	601-053-64	601-054-64
		L = 12900	1	-	601-053-65	601-054-65
1	Rigging screw pack		1	174-565-11	174-566-11	174-567-11
2	Eye pack, stud		1	301-652-11	301-653-11	301-654-11
3	Eye pack, sta-lok		1	301-671-11	301-672-11	301-673-11

1. 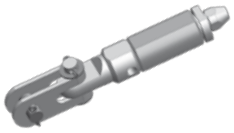	2. 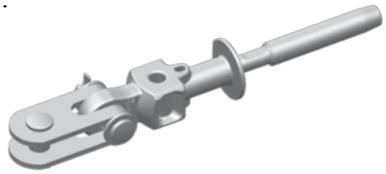	3. 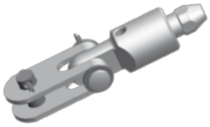

Luff extrusion pack, wire Ø4-6

Including luff extrusions, joining sleeves, distance tubes and connecting plates for forestay lengths according to table.

Description	Dimension	Qty	
Luff extrusion pack	FL=8100	1	549-132-02
Luff extrusion pack	FL=10500	1	549-132-03
Luff extrusion pack	FL=12900	1	549-132-04

Single luff extrusion pack, wire Ø4-6

Including 1 pcs luff extrusion, 1 pcs joining sleeve, 1 pcs distance tube and 1 pcs connecting plate

Description	Qty		Luff extrusion	Joining sleeve	Distance tube	Conn. plate
Single luff extrusion pack	1	549-130-01	L=1000	L=250	L=865	L=90
Single luff extrusion pack	1	549-131-01	L=2000	L=200	L=1800	L=40
Single luff extrusion pack	1	549-132-06	L=2400	L=200	L=2200	L=40

Luff extrusion	Joining sleeve	Distance tube
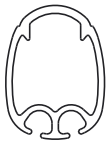		
Connecting plate		
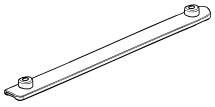		

6.7 Toggles & links

Toggle type		Forestay Dimensions		
		Ø 4 (5/32”)	**Ø 5 (3/16”)**	**Ø 6 (1/4”)**
Eye/fork toggle 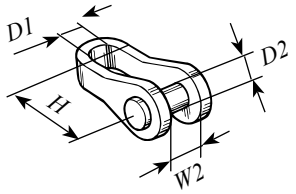	Article no.	174-102	174-103	174-104
	Length (H)	25 (1”)	35 (1 3/8”)	40 (1 1/2”)
	Ø Eye (D1)	8 (5/16”)	10 (3/8”)	11 (7/16”)
	Ø Clevis pin (D2)	8 (5/16”)	9.5 (3/8”)	11 (7/16”)
	Fork width (W2)	8 (5/16”)	10 (3/8”)	12 (1/2”)
Fork/Fork toggle 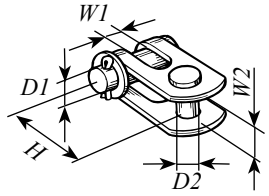	Article no.	517-056-02	517-054-02	517-046-02
	Length (H)	25 (1”)	30 (1 3/16”)	40 (1 1/2”)
	Ø Clevis pin (D1)	8 (5/16”)	10 (3/8”)	12 (1/2”)
	Fork width (W1)	7.5 (9/32”)	10 (3/8”)	11 (7/16”)
	Ø Clevis pin (D2)	8 (5/16”)	10 (3/8”)	10 (3/8”)
	Fork width (W2)	8 (5/16”)	11 (7/16”)	11 (7/16”)
Eye/fork Extensionlink 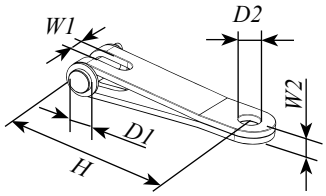	Article no.	517-944-01	517-945-01	517-063-01
	Length (H)	90 (3 9/16”)	90 (3 9/16”)	90 (3 9/16”)
	Ø Clevis pin (D1)	8 (5/16”)	10 (3/8”)	12 (1/2”)
	Fork width (W1)	7 (9/32”)	9.5 (3/8”)	11 (7/16”)
	Ø Hole (D2)	8.3 (21/64”)	10.3 (13/32””)	13 (33/64”)
	Gauge (W2)	4 (5/32”)	4 (5/32”)	6 (1/4”)

7 Warranty

Seldén Mast AB guarantees the Furlex-system for 2 years. The guarantee covers faults arising from defective design, materials or workmanship.

The guarantee is only valid if the Furlex-system is assembled, operated and maintained in accordance with this manual and is not subjected to loads in excess of those indicated in the brochure and instructions.

Complete shipment and warranty conditions are to be found on Seldéns website www.seldenmast.com.
See Resources/Partners information/General information/General conditions of sale (595-546-E).

If the system is repaired by anyone other than Seldén Mast AB or one of our authorized dealers, the guarantee ceases to be valid.

Seldén Mast AB reserves the right to alter the content and design without prior warning.

Notes

DINGHIESKEELBOATSYACHTS

Seldén Mast AB, Sweden
Tel +46 (0)31 69 69 00
Fax +46 (0)31 29 71 37
e-mail info@seldenmast.com

Seldén Mast Limited, UK
Tel +44 (0) 1329 504000
Fax +44 (0) 1329 504049
e-mail info@seldenmast.co.uk

Seldén Mast Inc., USA
Tel +1 843-760-6278
Fax +1 843-760-1220
e-mail info@seldenus.com

Seldén Mast A/S, DK
Tel +45 39 18 44 00
Fax +45 39 27 17 00
e-mail info@seldenmast.dk

Seldén Mid Europe B.V., NL
Tel +31 (0) 111-698 120
Fax +31 (0) 111-698 130
e-mail info@seldenmast.nl

Seldén Mast SAS, FR
Tel +33 (0) 251 362 110
Fax +33 (0) 251 362 185
e-mail info@seldenmast.fr

Seldén Mast Asia Ltd,
Hong Kong
Tel +852 3572 0613
Fax +852 3572 0623
e-mail info@seldenmast.com.hk

www.seldenmast.com

Dealer:

The Seldén Group is the world's leading manufacturer of mast and rigging systems in carbon and aluminium for dinghies, keelboats and yachts.

Our well known brands are Seldén and Furlex. The worldwide success of Furlex has enabled us to build a network of over 750 authorised dealers covering the world's marine markets. So wherever you sail, you can be sure of fast access to our service, spare parts and know-how.

SELDÉN and FURLEX are registered trademarks of Seldén Mast AB

SELDÉN

597-133-E Printed in Sweden